Simulation of Seawater Intrusion Area Using Feedforward Neural Network in Longkou, China

DaiyuanLi[1,2*], Yongxiang Wu[1], Erkun Gao[1],Gaoxu Wang[1] ,Yi Xu[1], Huaping Zhong[1] and Wei Wu[1]

1Hydrology and Water Resources Department, Nanjing Hydraulic Research Institute, Nanjing, China; 2College of Hydrology and Water Resource, Hohai University, Nanjing, China.

*Correspondence YP: dyli@nhri.cn

IAHR YPN

Hosted by Spain Water and IWHR, China

NHRI Since 1935 南京水利科学研究院

Abstract

Reliable simulation of seawater intrusion (SI) is necessary for sustainable groundwater utilization. As a powerful tool, feedforward neural network (FNN) was applied to study seawater intrusion area (SIA) fluctuations in Longkou, China. The results from the model indicated that this method could accurately reproduce SIA fluctuations when the Nash-Sutcliffe efficiency coefficient was 0.964, the root mean square error was 1.052 km^2, the correlation coefficient was 0.983, and the mean absolute error was 0.782 km^2. The results of sensitivity analysis prove that precipitation and groundwater pumping for agriculture mainly affect fluctuations of SIA in the study area. It can be concluded that FNN is effectively used for modeling SI fluctuations together with GWL, which can provide enough support for the sustainable management of groundwater resources with consideration of crucial impact factors of SI.

Keywords: Seawater intrusion area, Simulation, Feedforward neural network, Sensitivity analysis.

Methods

1. The FNN Model 1 is built to simulate GWL changes effected by climatic factors and human activities.
2. The FNN Model 2 is developed to simulate the relationship between GWL of three zones and SIA.
3. FNN Model 1 and FNN Model 2 are integrated, which means that the results of the FNN Model 1 are viewed as the input data of the FNN Model 2.
4. The sensitivity of each factor is studied by the "stepwise" method, in which input variables are deleted one and the corresponding model is developed and validated. Then the relative importance ranks are obtained by comparison of model performance criteria and crucial impact factors are identified for SIA and GWL.

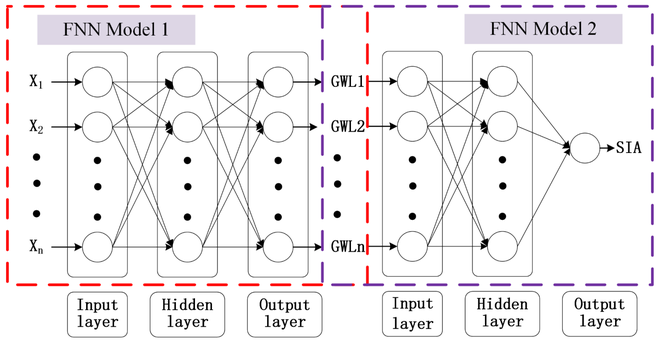

Figure 1: Configuration of the model for SIA simulation.

Results

- The model had an excellent performance based on statistical indicators and graphs, which can be used for accurately predicting GWL and SI.

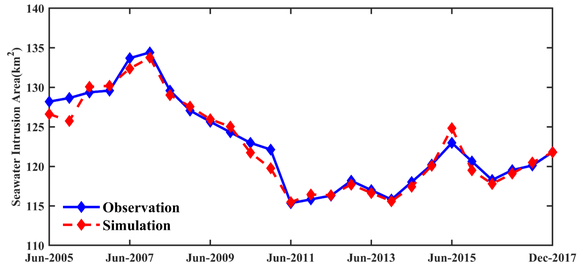

Figure 2: Comparison between observation and simulation of 6-monthly SIA.

- Six input scenarios for sensitivity analysis were established. As expected, factors of P(t), P(t-1), and GWSA (Groundwater supply for agriculture) had more contributions to SIA fluctuations, which ranked 3rd, 2nd, and 1st, respectively. In addition, the relative importance of T, GWSNA (Groundwater supply for non-agriculture), and SWSA(Surface water supply for agriculture) ranked 5th, 4th, and 6th.

Table 1: Sensitivity analysis results of impact factors for 6-monthly SIA.

Scenario	Impact Factor	MAE	RANK
NO-P(t)	P(t)	0.961	3
No-P(t-1)	P(t-1)	0.962	2
No-T	T	0.909	5
No-GWSA	GWSA	1.043	1
No-GWSNA	GWSNA	0.917	4
No-SWSA	SWSA	0.902	6

Conclusions

- FNN is an excellent choice for estimating SI changes together with GWL in the coastal aquifer.
- SIA can be considered as an alternative to estimate the development of SI, which is easier and more direct to use in water management.
- It is apparent that strengthening groundwater management for agriculture is significant for solving SI problem in Longkou. Meanwhile, this study can alert the government to capture crucial factors and make effective strategies in SI management.

Bibliography

Bhattacharjya, R.K., Datta, B., Satish, M.G. (2009). Performance of an Artificial Neural Network model for simulating saltwater intrusion process in coastal aquifers when training with noisy data. Ksce Journal of Civil Engineering .

Dey, S., Prakash, O. (2020) Management of Saltwater Intrusion in Coastal Aquifers: An Overview of Recent Advances. In Environmental Processes and Management.

Werner, A.D., Bakker, M., Post, V.E.; Vandenbohede, A, et al. (2013) Seawater intrusion processes, investigation and management: recent advances and future challenges. Advances in water resources.